REPUBLIC OF THE PHILIPPINES
DEPARTMENT OF PUBLIC WORKS AND HIGHWAYS
OFFICE OF THE BUILDING OFFICIAL
CITY OF DIPOLOG

RECOMMENDING APPROVAL:

APPROVED:

BUILDING OFFICIAL DATE

RECOMMENDING APPROVAL:

FIRE PROTECTION

HEAD DATE

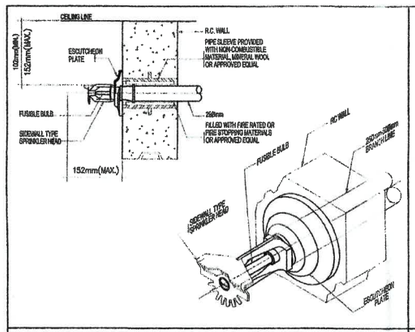

1 SIDEWALL SPRINKLER HEAD DETAIL

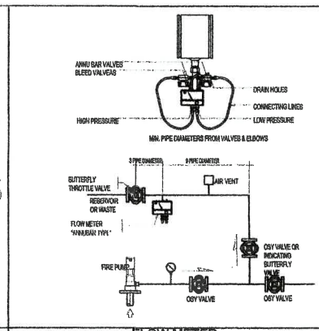

2 FLOW METER (ANNUBAR TYPE) DETAIL

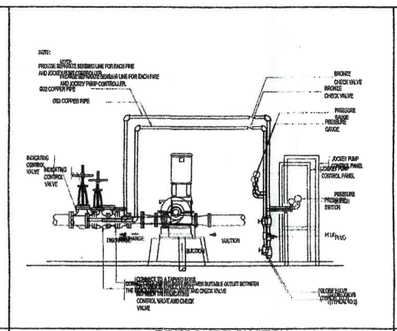

3 PRESSURE SWITCH PIPING CONNECTION

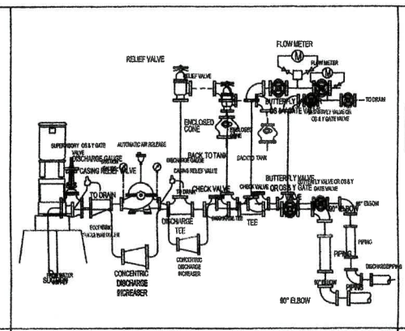

4 FIRE PUMP EQUIPMENT ARRANGEMENT DETAIL

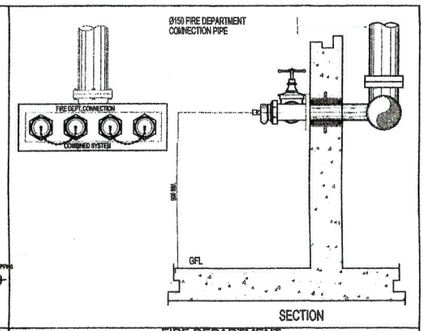

5 FIRE DEPARTMENT CONNECTION DETAIL

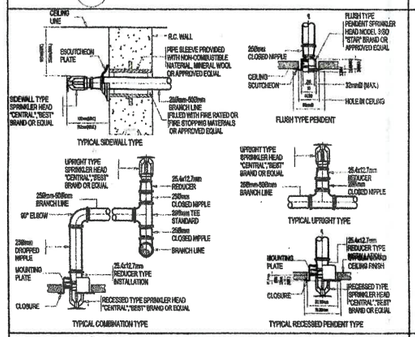

8 DETAIL OF SPRINKLER HEADS

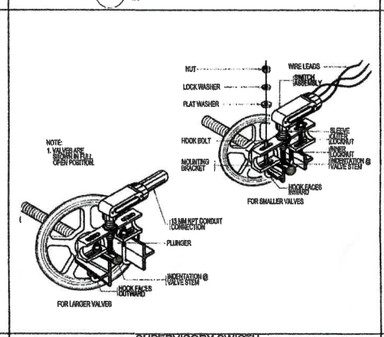

7 SUPERVISORY SWICTH CONNECTION DETAIL

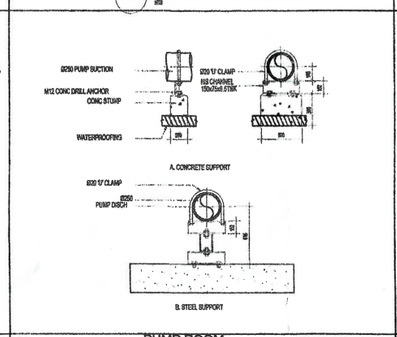

8 PUMP ROOM PIPE SUPPORT

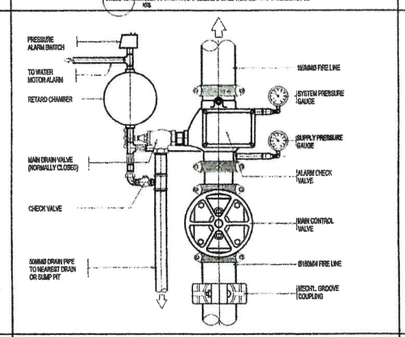

9 ALARM CHECK VALVE DETAIL

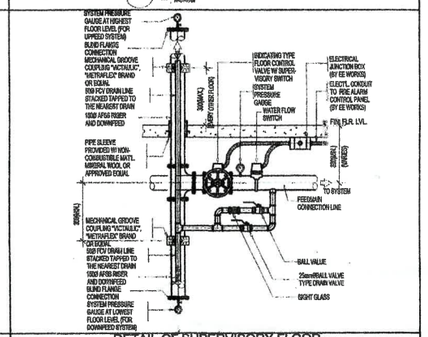

10 DETAIL OF SUPERVISORY FLOOR CONTROL VALVE ASSEMBLY

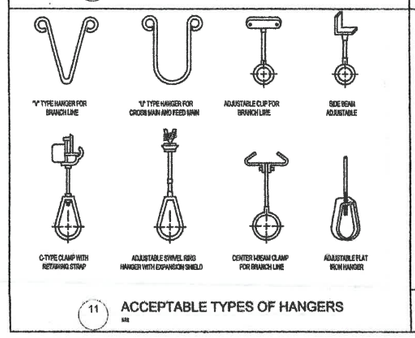

11 ACCEPTABLE TYPES OF HANGERS

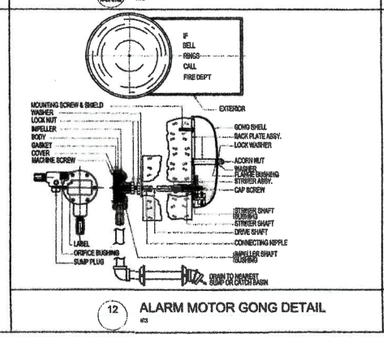

12 ALARM MOTOR GONG DETAIL

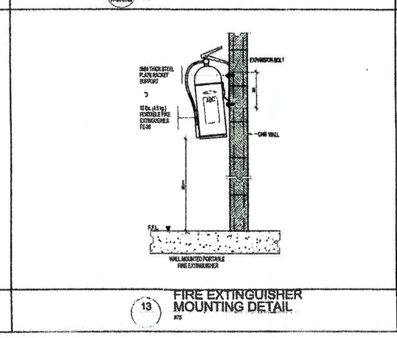

13 FIRE EXTINGUISHER MOUNTING DETAIL

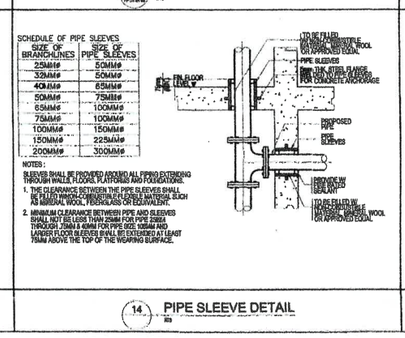

SCHEDULE OF PIPE SLEEVES

SIZE OF BRANCHLINES	SIZE OF PIPE SLEEVES
25MM#	50MM#
32MM#	50MM#
40MM#	65MM#
50MM#	75MM#
65MM#	100MM#
75MM#	100MM#
100MM#	150MM#
150MM#	225MM#
200MM#	300MM#

NOTES:
SLEEVES SHALL BE PROVIDED AROUND ALL PIPING EXTENDING THROUGH WALLS, FLOORS, PLATFORMS AND FOUNDATIONS.
1. THE CLEARANCE BETWEEN THE PIPE SLEEVES SHALL BE FILLED WITH NON-COMBUSTIBLE FLEXIBLE MATERIAL SUCH AS MINERAL WOOL, TECHNOLASS OR EQUIVALENT.
2. MINIMUM CLEARANCE BETWEEN PIPE AND SLEEVES SHALL NOT BE LESS THAN 20MM FOR PIPE 20MM THROUGH 200MM & 40MM FOR PIPE 50D 100MM AND LARGER FLOOR SLEEVES SHALL BE EXTENDED AT LEAST 75MM ABOVE THE TOP OF THE WEARING SURFACE.

14 PIPE SLEEVE DETAIL

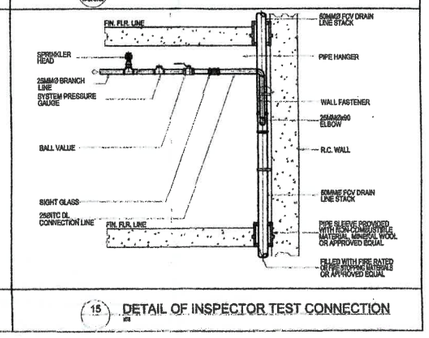

15 DETAIL OF INSPECTOR TEST CONNECTION

FROM THE OFFICE OF: ENGR. LEONIDAS M. PARAGSA, PROFESSIONAL MECHANICAL ENGINEER	R.A. 9266 (Art. IV, Sec.33) Drawings and specifications & other contract documents duly signed, stamped or sealed, as instruments of service are intellectual property & documents of the Architect, whether the object for w/c they are made is executed or not it shall be unlawful for any person to duplicate or to make copies of the said documents for the use in the repetition of & for other projects or buildings, whether executed partly or in a whole w/o the written consent of architect or author of said docs.	REG. NO. 4065	SEAL	PROJECT NO.	PROJECT TITLE:	APPROVED AS TO PLAN:	SHEET CONTENTS:
		DATE: 11-11-2004		REVISION NO.:	PROPOSED: PROPOSED CONSTRUCTION OF ADMINISTRATION BUILDING	OWNER: ENGR. LOUIE C. JAMORA PAE,MSc, OWNER	MISCELLANEUOS
		PTR NO. 177070		DRAWN BY: AMIL			
		DATE: 01-03-2018		DATE			
ADDRESS: BF BLDG. ESCARIO ST., CEBU CITY		T I N: 902-443-011		CHECKED BY	LOCATION: BRGY. COGON, DIPOLOG CITY	ADDRESS: DIPOLOG CITY	

SHEET NO. FP . 01 01 05

REPUBLIC OF THE PHILIPPINES
DEPARTMENT OF PUBLIC WORKS AND HIGHWAYS
OFFICE OF THE BUILDING OFFICIAL
CITY OF DIPOLOG

RECOMMENDING APPROVAL:

APPROVED:

BUILDING OFFICIAL — DATE

RECOMMENDING APPROVAL:

FIRE PROTECTION

HEAD — DATE

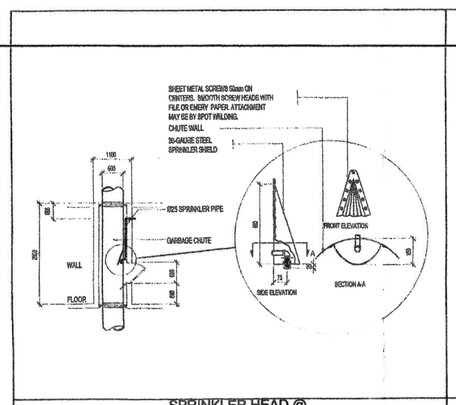

1 SPRINKLER HEAD @ GARBAGE CHUTE DETAIL
NTS

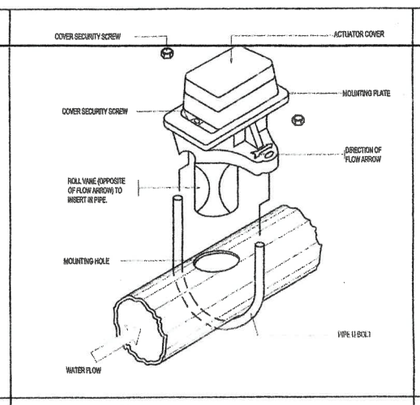

2 FLOW SWITCH DETAIL
NTS

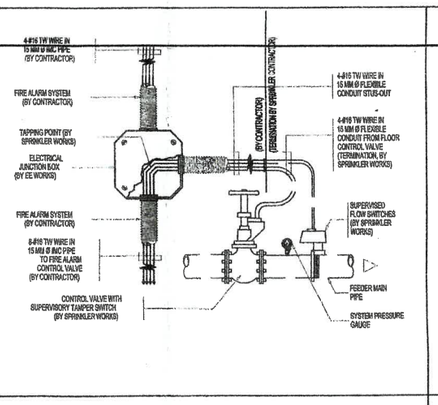

3 SPOT DETAIL
NTS

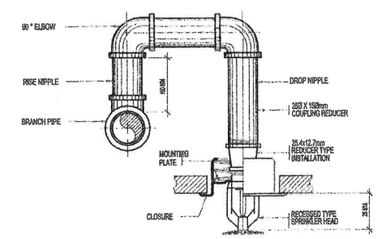

4 TYPICAL INSTALLATION OF PENDENT SPRINKLER HEAD
NTS

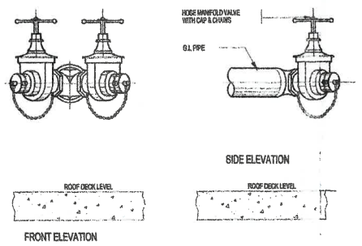

5 DETAIL OF ROOF MANIFOLD
NTS

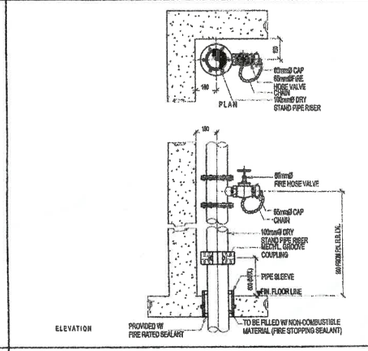

7 DRY STANDPIPE DETAIL
NTS

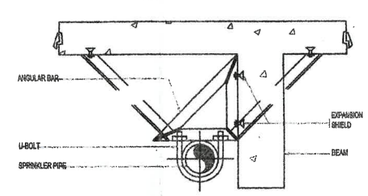

PIPE SIZE (MM)	U-BOLT ROD SIZE (MM)
50	10
65	10
80	10
100	12
125	12
150	16
200	16

8 SWAY BRACE DETAIL
NTS

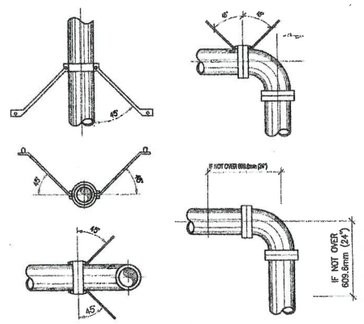

9 ACCEPTABLE TYPES OF SWAY BRACING
NTS

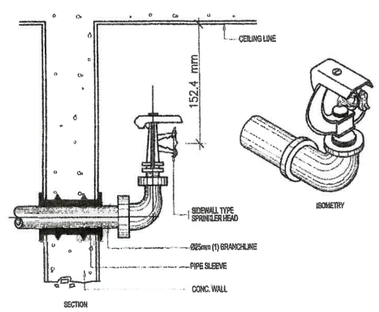

10 TYPICAL CUT-OFF SPRINKLER DETAIL
NTS

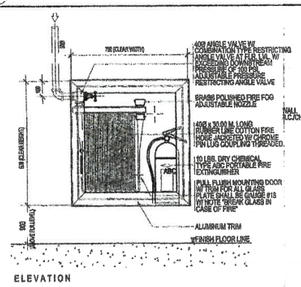

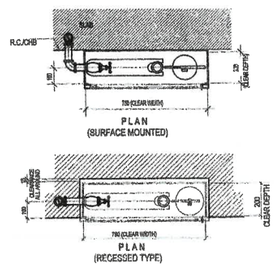

11 FIRE HOSE CABINET WITH FIRE EXTINGUISHER
NTS

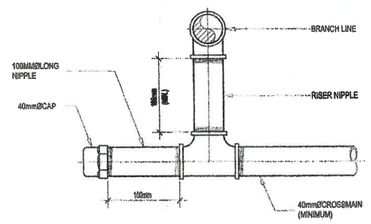

12 FLUSHING CONNECTION DETAIL
NTS

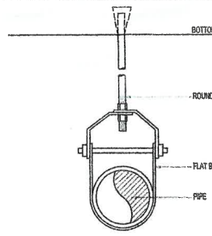

PIPE SIZE	FLAT BAR LOWER	FLAT BAR UPPER	ROUND BAR
65	4.8 x 32	4.8 x 32	12.7
75	4.8 x 32	4.8 x 32	12.7
100	4.8 x 32	6.4 X 32	15.9
150	4.8 x 32	6.4 X 32	19
200	4.8 x 32	6.4 X 32	25.4

13 ADJUSTABLE CLEVIS PIPE HANGER DETAIL
NTS

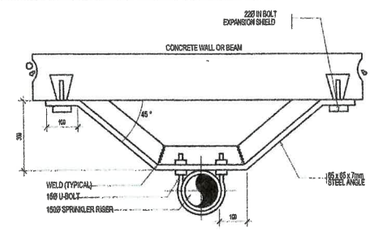

14 PIPE RISER BRACKET DETAIL
NTS

FROM THE OFFICE OF: ENGR. LEONARDO M. PARAGSA, PROFESSIONAL MECHANICAL ENGINEER	R.A. 9266 (Art. IV, Sec.33)	REG. NO. 4065	SEAL	PROJECT NO.	PROJECT TITLE:	APPROVED AS TO PLAN:	SHEET CONTENTS:
	Drawings and specifications & other contract documents duly signed, stamped or sealed, as instruments of service are intellectual property & documents of the Architect, whether the object for w/o they are made is executed or not it shall be unlawful for any person to duplicate or to make copies of the said documents for the use in the repetition of & for other projects or buildings, whether executed partly or in a whole w/o the written consent of architect or author of said docs.	DATE: 11-11-2004		REVISION NO.;	PROPOSED: PROPOSED CONSTRUCTION OF ADMINISTRATION BUILDING	OWNER: ENGR. LOUIE C. JAMORA PAE,MSc, CAMPUS DIRECTOR, OWNER	MISCELLANEUOS
		PTR NO. 177070		DRAWN BY: AMIL			
		DATE: 01-03-2018		DATE			
ADDRESS: BF BLDG. ESCARIO ST., CEBU CITY		T I N: 902-443-011		CHECKED BY	LOCATION: BRGY. COGON, DIPOLOG CITY	ADDRESS: DIPOLOG CITY	

SHEET NO. FP 01 / 01 — 06

REPUBLIC OF THE PHILIPPINES
DEPARTMENT OF PUBLIC
WORKS AND HIGHWAYS
OFFICE OF THE BUILDING OFFICIAL
CITY OF DIPOLOG

RECOMMENDING APPROVAL:

APPROVED:

BUILDING OFFICIAL — DATE

RECOMMENDING APPROVAL:

ELECTRONIC

HEAD — DATE

FIRE ALARM SYSTEM

1. NON-ADDRESABLE FIRE ALARM CONTROL PANEL
2. MAXIMUM RADIUS ALLOWED PER SMOKE DETECTOR 10.0 M. EACH ROOM SHOULD HAVE SMOKE DETECTOR
3. PROVIDE HEAT DETECTOR AT KITCHEN AREA.
4. SMOKE DETECTOR SHOULD BE INSTALLED AS PER NFPA STANDARD AND FIRE CODE OF THE PHILIIPINES.
5. DO NOT REDUCE EXISTING NUMBER OF SMOKE DETECTOR PROVISION AT SITE
6. USED PVC FOR ELECTRICAL PIPES
7. PROVIDE AT LEAST ONE (1) UNIT DETECTOR FOR ENCLOSED ROOM.

LEGEND

- SD — SMOKE DETECTOR (PHOTO ELECTRIC)
- HD — HEAT DETECTOR
- ALARM BELL
- MANUAL PUSH/PULL STATION W/ FIREMAN'S TELEPHONE JACK
- ANNUNCIATOR PANEL
- RISER
- FACP — FIRE ALARM CONTROL PANEL (FACP)

ALARM BELL

(+) - BLUE

(-) - WHITE

MANUAL PUSH/PULL STATION AND DETECTOR HEADS

(+) - RED

(-) - BLACK

EOLD	END OF LINE OF DETECTION
EOLB	END OF LINE OF BELL
EOLMP/B	END OF LINE OF FIREMANS TELEPHONE JACK AND MANUAL PUSH/PULL STATION
	ALARM BELL WIRING CONDUIT
	FIREMAN'S TEL JACK WIRING CIRCUIT
	MANUAL PUSH STATION AND DETECTORS WIRING CIRCUIT
SACP	SPRINKLER ALARM CONTROL PANEL (SACP)
	PULLBOX

DRAWING INDEX

SHEET NO.	CONTENTS
	GENERAL DRAWINGS
FAS-SH-01	DRAWING INDEX & TARGET, VICINITY MAP, FIRE ALARM SYSTEM, DETECTOR INSTALLATION DETAILS, LEGEND & SYMBOL, B/PS INSTALLATION DETAILS, SCHEMATIC DIAGRAM & SITE DEVT PLAN
FAS-02	THREE STOREY PLAN FIRE ALARM SYSYEM LAYOUT @ GROUND FLOOR PLAN
FAS-03	THREE STOREY PLAN FIRE ALARM SYSYEM LAYOUT @ SECOND FLOOR PLAN
FAS-04	THREE STOREY PLAN FIRE ALARM SYSYEM LAYOUT @ THIRD FLOOR PLAN

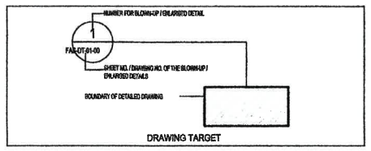

1 FDAS-VM-01 VICINITY MAP
NONE N.T.S.

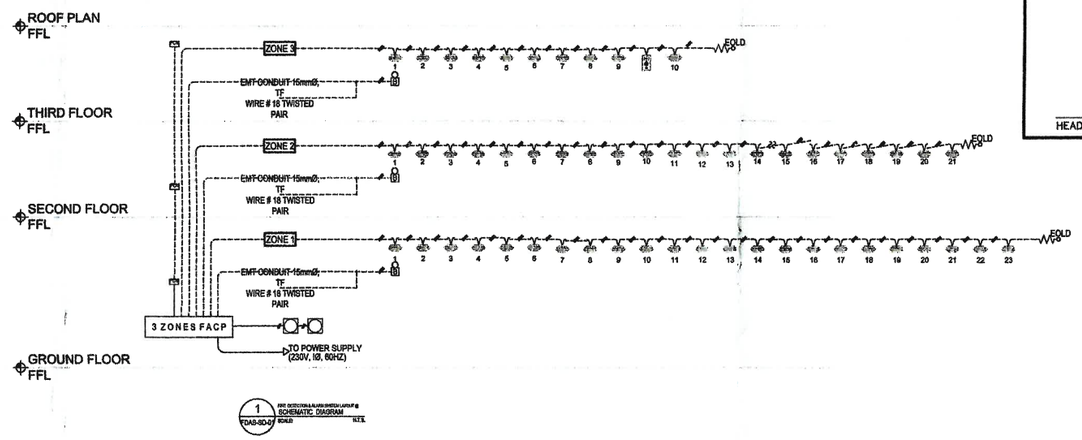

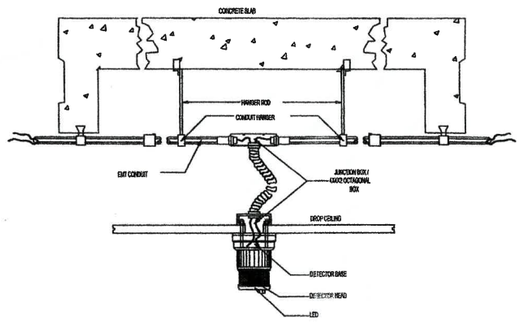

DETECTOR ,CONDUIT, HANGERS, CONNECTORS AND JUNCTION BOXES, MOUNTING DETAIL

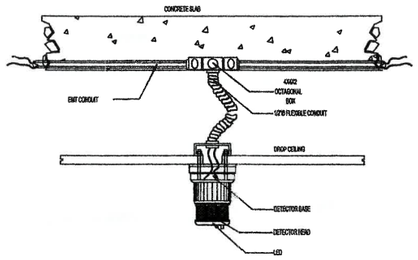

DETECTOR MOUNTING DETAIL ON DROP CEILING WITH CONDUITS EMBEDDED

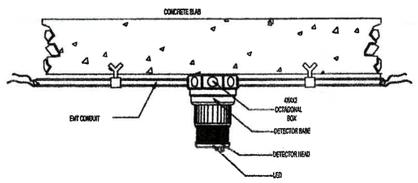

DETECTOR MOUNTING DETAIL WITH EXPOSED CONDUITS

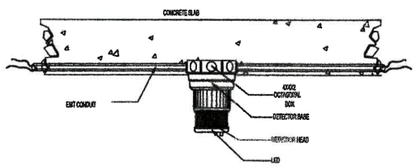

DETECTOR MOUNTING DETAIL WITH CONDUITS EMBEDDED

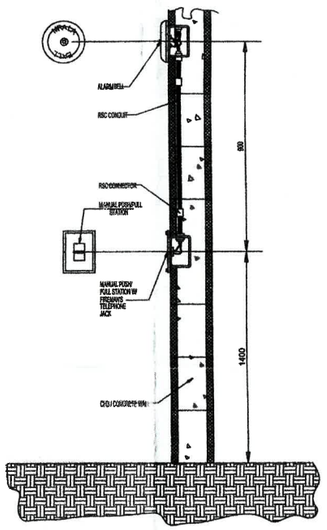

EVACUATION HORN, MANUAL ,PUSH STATION, AND FIREMAN'S TEL. JACK MOUNTING DETAIL

FROM THE OFFICE OF: ENGR. VICTOR C. NAVARRO, PROFESSIONAL ELECTRONIC ENGINEER	R.A. 9266 (Art. IV, Sec.33) Drawings and specifications & other contract documents duly signed, stamped or sealed, as instruments of service are intellectual property & documents of the Architect, whether the object for w/c they are made is executed or not it shall be unlawful for any person to duplicate or to make copies of the said documents for the use in the repetition of & for other projects or buildings, whether executed partly or in a whole w/o the written consent of architect or author of said docs.	REG. NO. 0432	SEAL	PROJECT NO.	PROJECT TITLE:	APPROVED AS TO PLAN:	SHEET CONTENTS:
		DATE: 05-24-2010		REVISION NO. :	PROPOSED: PROPOSED CONSTRUCTION OF ADMINISTRATION BUILDING	OWNER: PHILIPPINE SCIENCE HIGH SCHOOL ZAMBOANGA PENINSULA REGION CAMPUS ENGR. LOUIE C. JAMORA PAE,MSc CAMPUS DIRECTOR OWNER	GENERAL NOTES SCHEMATIC LAYOUT PLAN LEGENDS AND SYMBOLS DRAWING INDEX
		PTR NO. 1640868		DRAWN BY: AMIL			
		DATE: 01-04-2019		DATE			
ADDRESS: PARDO, CEBU CITY		T I N: 148-728-912		CHECKED BY	LOCATION: BRGY. COGON, DIPOLOG CITY	ADDRESS: DIPOLOG CITY	

SHEET NO. FDAS 01 / 01